RESERVATION APPLICATION

(Complete a separate application for each traveler. A duplicate form is on the reverse side.)

NAME OF TOUR: _____ ☐ TOUR & AIR ☐ TOUR ONLY

TOUR DEPARTURE DATE: _____ DEPARTURE CITY: _____

EARLY DEPARTURE/LATER RETURN/EXTENSION REQUESTS (please indicate extension hotel requests, if applicable):

_____

- A Reservation Application and signature is required for **EACH** person traveling (a duplicate form is on the reverse side).
- **Provide information exactly as it appears/will appear in your passport**. Yes, we do need the Birth Date for each participant.

NAME: _____ / _____ / _____
(as appears on passport) (First Name) (Middle Name) (Last Name)

ADDRESS: _____ / _____ / _____ / _____
(No. & Street) (City) (State) (Zip Code)

PH: _____ / _____ EMAIL ADDRESS: _____
Primary (Circle One: Home / Cell / Office) Alternate (Circle One: Home / Cell / Office) (Optional)

GENDER: ☐ M ☐ F ☐ X BIRTH DATE: _____ PLACE OF BIRTH: _____
(Month/Day/Year) (State and/or Country)

CITIZENSHIP (Country): _____ PASSPORT #: _____ EXP. DATE: _____

(Passport must be valid for at least 6 months after your return date. You may leave passport information blank and advise travel agency once received.)

EMERGENCY CONTACT: _____ RELATION: _____ PH: _____ / _____

ROOMMATE'S NAME: _____ ROOM TYPE: ☐ 1 DOUBLE BED / ☐ 2 TWIN BEDS / ☐ TRIPLE

☐ SINGLE ROOM - If this box is checked, additional paperwork is required. See 'Are Single Rooms offered?' on page 63.

NAME OF TRAVELING COMPANION (other than roommate): _____

DIET REQUESTS (Not guaranteed) - See page 64 for options: _____

Travel Protection Plan (Please check one of the options within this box. The Plan only covers U.S. citizens or residents.)
Review the "Description of Coverage" at www.ImageTours.com/TravelProtectionPlan

☐ I wish to purchase the Image Tours Travel Protection Plan and have included the payment with my deposit.
☐ I wish to decline the Travel Protection Plan offered through Image Tours

Please select one of the following to pay only the non-refundable deposit and optional Travel Protection Plan:
Important: For full or final payments, request a Final Invoice for authorization.

☐ ACH (electronic check): I authorize Image Tours to debit $_____ from my Checking Account #: _____
Routing #: _____ Bank Name/Address: _____
Name on Account: _____ Date: _____ Authorized Signature: _____

☐ Please charge $_____ to my Discover®/Visa®/MasterCard® Account #: _____
Exp. Date: _____ CVC#: _____ Billing Address if different than above: _____
Card Holder Name: _____ Date: _____ Card Holder Signature: _____

☐ My payment is authorized with my travel companion's application.

I have read the IMAGE TOURS BROCHURE pertaining to this tour and I understand and accept its contents, including *FAQ*, *Physical Condition Guidelines* and *Tour Contract*. Tour & Air Inclusive Price is subject to change until paid in full. To view the brochure online, go to www.ImageTours.com/EuropeBrochure

SIGNATURE OF PERSON TRAVELING: _____ DATE: _____
(Please sign full name as it appears / will appear in your passport. If traveler is under 18, legal guardian must also sign.)

I FIRST FOUND OUT ABOUT THE TOUR FROM: _____
(Name of Newspaper, Magazine, Website, Internet Search, Facebook, Mailer or please specify other source)

Printed Jan. 2023

TRAVEL AGENT:

PLEASE COMPLETE THE INFORMATION BELOW AND IN THE BOX!

Res ID: _____ IATAN #: _____

Agent's Full Name: _____

Agency Name: _____

Ph: _____ Email: _____

Travel Agency Name & Address

©2023 Image Tours

FAQ (Frequently Asked Questions)

Many of the questions you have regarding your tour can be answered by reading through this brochure. Knowing as much as you can beforehand will allow you to enjoy your tour experience to the fullest. The information in the FAQ section is based on what was known at the time of printing and is subject to change at any time. The terms and conditions of your travel arrangements are controlled by the Tour Contract, starting on page 68. It is necessary that you read through the next three sections (FAQ, PHYSICAL CONDITION GUIDELINES and TOUR CONTRACT) prior to making your reservation.

Are Vaccinations, Visas or other Documentation required, in addition to a Passport? Non-U.S. citizens must check with their embassy or consulate before making a deposit, to determine which documentation they will need for each of the countries they will visit. Image Tours will make every effort to pass along information and instructions regarding travel requirements applicable to U.S. passport holders as well as general requirements for all passengers participating in our tours, as dictated by government entities or services. The most current Travel Requirements known to Image Tours can be reviewed at www.ImageTours.com. Information is subject to change, and it is the passenger's responsibility to become familiar with and fulfill the requirements applicable at time of travel. Image Tours will not be responsible for the consequences due to any inability, for any reason, to provide proper documentation at time of travel. Cancellation or denied entry due to the inability to obtain or provide proper documentation or meet requirements will be subject to the Image Tours "Cancellations" policy.

What Age do Children need to be to go on these tours? Children under eight (8) years of age are not accepted on our tours because it is difficult to keep them entertained on the motor coach, and this may impact the enjoyment of other tour members. Children between the ages of 8 and 17 must be accompanied by an adult. If the accompanying adult is not the child's legal guardian, the legal guardian must sign the Reservation Application and a notarized consent form (provided at time of reservation).

Are there any Discounts for Children?
Unless you are informed otherwise, at the time you make your reservation, children who will be ages 8 through 17 at time of departure and will share a room with at least one legal guardian are eligible for a $250 discount. No children discounts apply to extensions, optional excursions, or any other additional costs.

What is the difference between a Double and a Twin Room? A "double" room consists of one double bed. The European "twin" room consists of two twin beds made up separately, placed side by side, and sharing the same headboard. In some hotels it may not be possible to separate these twin beds. Image Tours can request "twin" or "double" accommodations; however, some hotels do not offer the choice or guests may not always receive their preferred choice due to limited allotments.

Are Triple Rooms offered?
If available, triple occupancy rooms are the same per person price as double occupancy. "Triples" usually consist of a double bed or two twin beds with a folding bed, cot, or rollaway for the third person. Be aware that these accommodations may not be comfortable for three adults. If a triple room is not available, one double plus one single room may be substituted and the single room supplement will apply.

Are Single Rooms offered?
Single room availability is limited and on request. Image Tours may decline an application for a single room without explanation. If confirmed, a single room supplement will apply (the "Dates & Prices Guide" lists the amount for each tour). Single rooms are often much smaller and not as ideally located. If you have paid the full single supplement and end up sharing a room, you will receive a refund equivalent to the average nightly single supplement. Passengers requesting a single room will be required to provide a signed statement of current physical status, acknowledging the passenger is fit to travel alone (including the signature of a family member as an emergency contact), and the signed "Physical Condition Guidelines" (see page 67).

Can Image Tours help find a Roommate?
Image Tours is unable to assist in finding a roommate. If you do not have a roommate, you will need to request a single room. Refer to "Are Single Rooms offered?".

How are Rooms Assigned?
Room assignments are made by the individual hotels. The location, view and size of the rooms may vary.

Do the Hotel Rooms have Private Bathrooms?
All rooms have a private bathroom with a sink, toilet, and shower/bathtub. Most hotels provide a hairdryer.

©2023 Image Tours

FAQ (Frequently Asked Questions)

When will I know which Hotels will be used?
A list of tour hotels, along with their addresses and phone numbers, will be included with your Trip Documents, which you will receive at least one week prior to departure. For a list of frequently used hotels, see pages 60 and 61. For hotel amenities and web links, go to www.ImageTours.com.

Do the Hotels have Heating & Air Conditioning?
All our hotels are equipped with central heating. Due to a milder climate, air conditioning is not as widely used in Europe as it is in the U.S.A. Therefore, hotels in northern and central Europe commonly do not feature air conditioning. For hotel amenities and web links, go to www.ImageTours.com.

What do the Hotels serve for Breakfast?
Breakfasts are served at the hotels and usually include a selection of breads, butter, jam, cheese, cold cuts, coffee, tea, milk and juice. Other commonly offered items are cereal, pastries, fruit, yogurt and hard boiled eggs. Some options and preparation will reflect what is customary in the local area.

What is typical for the included Dinners?
The included dinners are most commonly served at the tour hotel following a prearranged, fixed menu. We work closely with the restaurants to provide a variety of dishes throughout the tour. Unless otherwise advised by your tour manager, beverages are not included with dinners. Although it is not customary in Europe, our hotels make every effort to provide water with dinner, when possible, as a special courtesy to Image Tours' clients.

May I request Special Diet Meals?
If notified in writing at least 90 days prior to departure, Image Tours accepts only the following diet requests: 1) diabetic; 2) gluten-free; 3) vegan; 4) vegetarian with dairy and eggs; 5) semi-vegetarian (no pork or red meat); 6) no shellfish/fish; 7) lactose-free. Although we will inform the tour manager and the hotels, any dietary requirements remain entirely your own responsibility. Please do not give the tour manager a list of items you may or may not eat and expect to pay additional if a restaurant is able to accommodate a special request. Image Tours expressly disclaims any responsibility or liability in connection with dietary requirements. Image Tours does not forward diet requests to the airlines, but passengers may be able to submit such preferences themselves through the airline website.

Is this a Non-Smoking Tour?
The term "smoking" includes vaping (e-cigarettes). Regardless of the local policies, tour participants agree to adhere to a strict non-smoking policy for the motor coach, breakfasts, group dinners, and any other group activities. Image Tours requests non-smoking rooms for all tour participants. Many hotels have converted to only non-smoking rooms and charge a substantial penalty to guests who smoke in the room. Image Tours expressly disclaims any responsibility or liability in connection with smoking or non-smoking requirements.

Do I need to bring Formal Attire?
Comfort is the priority. There are no occasions that require formal attire, but some clients like to bring one casually elegant outfit for special occasion dinners.

What can I expect regarding Baggage Handling?
At the airports, you will have the use of luggage carts to transport your luggage to the motor coach. At hotels, expect to handle your own luggage between the motor coach and your room. Less hotels offer porter service as wheeled suitcases have made self-portering more convenient and faster. For this reason, wheeled suitcases are recommended. Wheeled carry-ons are discouraged. Your suitcase will be stored under the motor coach and your carry on will need to be stored under your seat. Please read "Baggage Allowances" on page 70.

May I leave my Carry-on in the Motor Coach?
You will not be able to store your carry-on in the luggage compartment under the motor coach. During the day, leaving your carry-on in the motor coach (must be placed under your seat) is at your own risk. You must remove your carry-on from the motor coach upon arrival at the hotel at the end of each day.

Are Airport Transfers included?
On Day 2 and again on the last day of the tour, one scheduled group transfer between the airport and the hotel (hosted by the tour manager) is available at no additional cost. Transfer times in each direction are set based on the scheduled flight times of passengers who have purchased the complete "Tour & Air Inclusive" package from Image Tours. If you purchased "Tour Only" from Image Tours, expect to make your own way between the airports and the hotels at your own expense; but you are welcome to join the complimentary transfer if your actual flight time coincides with the group transfer time. Book early morning arrivals and afternoon return departures for the best

©2023 Image Tours

FAQ (Frequently Asked Questions)

chance to join the group transfer. If you are unable to join the group transfer due to schedules, flight delays, or for any other reason, you will need to transfer between the airport and the hotel on your own, and the entire cost of this transfer will be your responsibility. Under no circumstance will Image Tours be held responsible for any transfer costs. As you consider travel protection plans, check if travel delay coverage is included. Pre- and post-tour extensions do not include transfers.

Where do I Meet the Tour Manager?
The Tour Manager will be waiting at an assigned Meeting Point inside the arrival airport in Europe, at the time of the scheduled group transfer. "Arrival Instructions," including the Meeting Point location and time, are provided with the Trip Documents, which you will receive at least one week prior to the tour. Please review this information and keep this close at hand on the day of travel.

Will the Tour Manager accompany us throughout the entire tour? Generally, the tour manager who accompanies the group arrival transfer to the first tour hotel will accompany the entire tour.

Are Tips for the Tour Manager & Driver included?
The tips for the tour manager and driver are not included. This allows you to express your appreciation based on the level of service provided and their contribution to your overall enjoyment of the tour. An average tip is the local currency equivalent of $5 per person per day. Tips should be paid in the local currency. Tipping envelopes are supplied with the Trip Documents.

Are Tips for Other Services included?
Tipping is included for all services that are pre-arranged by Image Tours, including hotel staff, restaurant staff and during optional excursions. Generally, if anyone who provides a pre-arranged tour service is just doing their job, you need not tip. On the other hand, feel free to tip any personnel who is extra helpful or goes beyond expectations. When you purchase beverages or receive water service with dinner, it is polite to include a tip of at least 50 cents. During independent meals, the general rule at restaurants in Europe is 5% to 10%.

When do I pay for the Optional Excursions?
Unless noted otherwise in the description, you will select and pay for the optional excursions during the first few days while on the tour. See pages 48 through 52 for excursion descriptions and payment instructions.

What Time does the tour group usually Depart and Arrive at the Hotels? Times vary subject to daily activities. On most days, the tour will depart from the hotel between 8:00 a.m. and 9:00 a.m. and will arrive at the hotel between 5:00 p.m. and 6:00 p.m.

How much Free Time will I have?
When you make a sightseeing stop, your tour manager will typically indicate points of interest while on the motor coach and/or with a walking tour, followed by 45 minutes to 2 hours for independent sightseeing, depending on the location. You may forego a walking tour if you prefer more independent time.

How much Time will I spend on the Motor Coach?
Our tours are planned so that the average time on the motor coach between stops is 1½ to 2 hours. For more specific times, consult the "Travel Time" section of your tour on our website at www.ImageTours.com.

Is there a Bathroom on the Motor Coach?
Although motor coaches are usually equipped with an enclosed portable toilet, you are asked to limit its use to emergencies only, due to scarcity of disposal sites. Frequent rest stops will be made to allow for a comfortable traveling experience.

Do the Motor Coaches have Air Conditioning & Heating? All our motor coaches are equipped with air conditioning and heating. Due to pollution prevention laws, motor coaches are required to turn off their engines (which also turns off the heating and air conditioning) when at a stand-still (for example, while parked or waiting at a light). On warmer days when air conditioning is in use, the temperature on the motor coach tends to be about 10º lower than the outside. For example, on an 80º day the temperature on the motor coach will be about 70º.

How are Seats Assigned on the Motor Coach?
Seating on the motor coach will be assigned using a rotation system, unless prohibited by government or industry regulations. Passengers traveling together may sit on the same side of the coach as their travel companions in order to rotate together. Out of fairness to all, we do not accept special seating requests for any reason and expect full participation in the rotation system.

May I request Airline Seat Assignments?
Some airlines or flights do not allow for seat assignments until check-in. If the airline does allow pre-assigned seats,

©2023 Image Tours

you may request seat assignments through the airline website, after final payment and after tickets have been issued. Please note these seat assignments may be canceled by the airline due to schedule or equipment changes, and it is recommended that you reconfirm seat assignments 25 days prior and again a few days prior to departure. Any fees charged by the airlines for pre-assigned seating are not included in the tour price and must be paid directly to the airlines.

May I record Frequent Flyer information or Known Traveler Numbers? It is the traveler's responsibility to record their Frequent Flyer number or Known Traveler number on the airline website, as applicable.

Is it possible to Extend the Stay?
Early departures, later returns and extension accommodations must be requested before your deposit is processed. For "Tour & Air Inclusive" reservations, a $50 per person air deviation fee will apply in each direction of deviation. Extensions are independent and unescorted, and all transfers are at the traveler's own expense. Extension requests will be subject to availability of air and hotel space. Image Tours may substitute alternative accommodations if the tour hotel is not available. If you requested an extension prior to tour reservation deposit, and Image Tours is unable to secure the services without additional cost, you will have the option, within three days of notification, to: authorize a price increase; change the date; cancel the extension; or cancel the entire reservation with full refund. For a listing of extensions offered by Image Tours and the prices, refer to the most current "Dates & Prices Guide" or ask your travel agent.

Will any credit be available for Unused Tour Nights?
Tour prices are based on full group utilization of services. No credit or refund will apply for unused tour nights or services. You may leave the tour at any point after communicating your plans to the tour manager. You may only rejoin the tour at a scheduled overnight hotel.

Should I bring a Cell Phone/Smartphone?
A smartphone with ear buds is essential for photos, alarm, maps, notes, audio guides, online registrations and convenient communications with the Tour Manager as well as other service providers. Check with your mobile phone provider about short term international data and calling plans. If you will use your phone for photos, consider increasing your phone memory. Sign up for "WhatsApp," a cost-free way to communicate over WI-FI with other WhatsApp users. Not all motor coaches have USB plugs, so pack a USB battery pack to recharge your phone during the day.

What happens if I Arrive Late at a departure point?
At each stop, write down the meeting time and the name of the cross streets or landmark near your meeting point so you can ask for directions in case you get lost. In the unlikely event that you do not arrive at a meeting point on time, proceed to your hotel by way of a taxi, train or bus. If you need to do this, any costs will be at your own expense, but you can ask police, bus drivers, train station or tourist office personnel for assistance. Always carry your passport and a copy of your Overnight Schedule with you!

What happens if I Lose an Article?
Neither Image Tours nor any company contracted through Image Tours shall be responsible for articles lost, stolen, left behind, confiscated or damaged. To prevent disappointment, check to ensure you have all your possessions each time you leave a motor coach, hotel, restaurant, shop, and on all other occasions throughout your tour. Although lost articles are rarely retrieved, your best chance to recover a lost item is to inform the tour manager immediately. Out of consideration for your fellow travelers, do not ask the driver/tour manager to wait or turn back to retrieve a lost article. If services are able and willing to attempt to ship the item, all retrieval and shipping costs (on average $75 per item) will be the responsibility of the owner, even when unsuccessful. Phones and other electronic devices may **not** be shipped internationally.

How can I get Contact Information of fellow Travelers?
Image Tours respects the privacy of their tour participants and therefore does not give out client contact information. If you wish to keep in contact with your fellow tour participants, be sure to ask for their information during the tour.

What is the Weather like in Europe?
The weather in Europe, like that in most places, is unpredictable. While planning your wardrobe, imagine that you are planning a trip through the U.S.A. Season for season, the climate of the midwest is comparable to western and central Europe, and the climate in our southern states is comparable to southern Europe. Even in the summer, bring a warm sweater and a raincoat. Conversely, during the fall months, you may experience some warmer temperatures. Enjoying the sights, sounds and smells of Europe is in no way bound by seasons or the weather. So, whether guided by your calendar, or by your pocketbook, select the season that suits you best and capture the fun of an Image tour … in any season!

©2023 Image Tours

Physical Condition Guidelines

Tour Pace and Walking Requirements:

The pace of the tours is considered "ACTIVE." Three or four miles of walking is required on a daily basis in order to fully experience the sights. Walks regularly require negotiating uneven surfaces and steps. Consequently, participants need to be able to comfortably walk a continuous mile unassisted (by person, cane or otherwise), in less than 30 minutes, without shortness of breath or other physical discomfort. If you cannot do this, these tours are not a good fit for you.

What if I am unable to keep up during the Tour?

If you are unable to keep up with the group, the tour manager will ask you to refrain from group activities, and it will be your responsibility to be at the designated meeting point at the stipulated time. If you have to purchase a refreshment in return for a place to sit or take a taxi to get to the meeting point, these costs will be at your own expense.

The Motor Coach is NOT Accessible during Free Time or Sightseeing Stops:

During free time and at sightseeing stops, all passengers must exit the motor coach. Staying on the parked motor coach is **not** an option.

Physical Assistance or other Special Attention:

Tour and hotel personnel will not be available to lift or physically assist you at any time. If you require any type of support, you must bring a capable travel companion who can comfortably help you keep up with the pace of the tour. With an average of 40 participants, it is not possible for the tour manager and/or the motor coach driver to provide repetitive, special attention to any one tour member.
The tour manager may ask a passenger to leave the tour if that passenger is unable to keep up with the pace of the tour to the extent that it impedes the safety or overall enjoyment of that passenger or other tour members. In the event a passenger is asked to leave the tour, all resulting costs will be solely that passenger's responsibility.

Wheelchairs or other Walking Devices:

These tours are **NOT** a good fit for passengers who require the use of a wheelchair, cane, walker or other walking assistance device, or for passengers who are considering the use of a walking assistance device while they travel. If this applies to you and you are still considering a reservation request, please note the following:

1) A walker or similar walking assistance device is not practical or safe on the tour due to motor coach entrances, uneven sidewalks and cobblestone streets. You will need to leave it home. A cane is also considered unsafe unless you regularly use a cane and feel confident that you will have no difficulty sturdily and comfortably walking a mile in less than 30 minutes (including steps). Image Tours recommends bringing a folding wheelchair for back up.
2) You must be able to manage the steps of the motor coach independently. In Europe, the laws do not require motor coaches to be equipped with ramps/lifts, or hotels to offer provisions for the physically challenged. Please do not expect these facilities on our tours.
3) You must bring your own manual, folding wheelchair. Motorized wheelchairs are not allowed on our tours.
4) You must bring a capable travel companion (Image Tours recommends traveling with two or more capable companions for the greatest success) who can confidently push the wheelchair and assist you in any way necessary to comfortably keep up with the tour pace.
5) At time of reservation you must obtain, complete and return a "Wheelchair Request" form (provided by Image Tours), signed by both you and your traveling companion(s). Requests will be subject to Image Tours' approval and availability of storage space. If the request is received after deposit and declined by Image Tours, the applicable cancellation penalties will apply.
6) The charge to store a wheelchair under the motor coach during the tour is $10.00 multiplied by the total number of tour days. This amount must be paid with final payment for the tour.
7) Make sure you and your travel companion(s) feel confident using a wheelchair outside your home before making a reservation. Passengers who are not comfortable using a wheelchair on a daily basis before the tour tend to be less likely to successfully complete the tour. No credits or refunds will apply for missed sights, tour features, wheelchair storage fees or optional excursions. Additional costs to keep up with the tour or return home early will be entirely the tour participant's responsibility.

Oxygen or other Medical Devices:

Oxygen tanks will not be permitted on the motor coach. Due to higher elevations and the tour's active pace, clients dependent on oxygen assistance devices should not take these tours. CPAP and other medical devices must fit within the "Baggage Allowances" for the tour. Under no circumstance does Image Tours, the airlines, the motor coach company, the tour manager, the hotels or any other service provider accept any responsibility or liability in connection with medical conditions, medical devices or any electronic devices.

Geographical Elevations:

Highest expected elevations, based on usual tour routings, are stated above the map for each tour itinerary and in the "Optional Excursions" descriptions. Image Tours accepts no liability for inaccuracies or variations.

©2023 Image Tours

Tour Contract

General: Upon full payment of the tour price by the participant, Image Tours, 2828 Kraft Ave. S.E., Grand Rapids, MI 49512, Ph: 616/957-1010, Fax: 616/957-0103, agrees to secure the services specified in this brochure, subject to the terms, conditions and limitations contained in this contract. The participant agrees that if there are any corrections or changes, the correct information will prevail.

Included: Consult "Included Features" on pages 8 and 9 as well as the itinerary for each tour.

Not Included: All costs not included in "Included Features," for example, fees and charges for travel protection plans/insurance, optional excursions, beverages (except when expressly specified), passports, visas, vaccinations, medical exams/tests, baggage handling, laundry, phone calls, any items of a personal nature, or any other items/services the inclusion of which has not been expressly specified in this brochure. Also not included are any fees associated with (or in connection with) air transportation, including but not limited to seat assignments, fees charged at the airport, and baggage.

Airlines, Accommodations & Services: Image Tours strives to coordinate and execute a pleasurable and memorable trip for all of its customers, but it must be remembered that all aspects of the tour, including but not limited to transportation, accommodations, tour managers/guides and services are furnished by independent companies which are not under the direct control of Image Tours.

Driver/Tour Manager: As a general rule, Image Tours secures both a driver and a tour manager for each tour. Under certain circumstances, Image Tours may have the driver double as the tour manager.

Itinerary Deviations: Due to special circumstances (including but not limited to holidays, special events, seasonal schedule changes, weather, safety considerations, government restrictions, and traffic delays), some sights, services or stores may have reduced hours or may not be available. Under such circumstances or toward the improvement of the tour experience, Image Tours and the tour manager reserve the right to make changes to the tour routing or visited sights, at their sole discretion.

Physical Condition Guidelines: Read the "Physical Condition Guidelines" on page 67 before making a reservation, in order to determine if these tours are a good fit for you.

Reservations: Image Tours requires a signed Reservation Application and deposit for each participant within one week of reservation. A signed Reservation Application validates that the participant has reviewed this Tour Contract and agrees to abide by its terms and conditions. Each participant must provide their signed Reservation Application and a non-refundable deposit of $250 per person, plus the optional Image Tours Travel Protection Plan, to the travel agency whose name and contact information appears on the Reservation Application. Immediate full payment is required for new reservations made within 100 days prior to departure.

Final Payment: Final payment must be received by Image Tours at least 90 days prior to departure. Please Note:

1) After initial deposit, Image Tours accepts only one payment per person (one traveler credit card number or one ACH debit transaction). No split or partial payments will be accepted.
2) Image Tours accepts payment by ACH debit authorization (which is an electronic alternative to paying by check). No fees apply.
3) Image Tours accepts Visa®, MasterCard® or Discover®, with a signature for authorization by a card holder traveling on the tour and date stated on the invoice. Image Tours reserves the right to pass along up to 2% in credit card processing fees, in which case Image Tours will advise of applicable fees at time of transaction.
4) Image Tours reserves the right to cancel a reservation for which it has not received payment by the due date, including payments declined due to insufficient funds. Cancellation penalties will apply.

Price Guarantee: Image Tours will guarantee the Tour Only price after processing the deposit and completed Reservation Application. Image Tours guarantees the Tour and Air Inclusive price after the reservation is paid in full. In order to guarantee the air price, Image Tours must have the flexibility to issue the air tickets. Subsequently, changes or cancellations after final payment are subject to the air transportation penalties as outlined in the Image Tours "Cancellations" policy.

Air Schedules: Prices are based on Economy Class fares. Air schedules will be provided after the Tour and Air Inclusive reservation is paid in full and tickets are issued. Image Tours is not responsible for overnight stays or independent transfers occasioned by airline schedules or delays. Seat assignments and baggage fees are not included and, if charged, must be paid by passengers directly to the airlines. Frequent Flyer Miles, luggage transfer service between flights, and pre-assigned seats may not be available. Air schedules are subject to change at any time, and tour participants who cancel due to changes in airline or changes in flight schedule will be subject to the Image Tours

©2023 Image Tours

Tour Contract

"Cancellations" policy. A participant wishing to request a specific schedule, airline, or upgrade must ask their travel agent to check the approximate cost prior to deposit, as this will usually require a "Tour Only" reservation with air purchased through another source. The participant will be responsible for any resulting price increases, change fees, penalties, or transfer costs. Always check with your travel agent before purchasing an air ticket from another source. Image Tours does not recommend issuing air tickets until within 75 days prior to departure and shall not be held liable for any fees/costs/penalties incurred for tickets purchased through another source, regardless of the reason.

Airport Transfers: On page 64, see "Are Airport Transfers Included?".

Travel Requirement: Refer to "Obtaining a Passport Book" on page 62 and "Are Vaccinations, Visas or other Documentation required, in addition to Passport?" on page 63.

Change Fees: After Image Tours processes the deposit, all change requests must be in writing. **Name changes** (substitutions) or **tour changes** (to a different tour date or itinerary) are considered cancellations/new reservations and are subject to the "Cancellations" policy. Change requests are subject to availability and Image Tours' acceptance. If confirmed, changes including but not limited to "Tour & Air Inclusive" to "Tour Only" and vice versa, departure/return date (when the tour date remains the same), U.S. departure/return city, extensions, and spelling of name will be subject to the following change fees, in addition to any applicable increase in price:

1) Prior to final payment, $100 per person.
2) After final payment, all changes are considered a cancellation and new reservation and are subject to the "Cancellations" policy.

Early Returns: If you need to change your return date or location, air tickets are subject to change fees and you may need to purchase a one-way air ticket. If you must return early for a medical reason, obtaining a statement from the attending physician may help reduce airline fees and facilitate a claim through a travel protection plan.

Cancellations: Image Tours must receive the client's notification of cancellation in writing. The date such notification is received by Image Tours will determine the applicable penalties. The following cancellation penalties apply and will be retained by Image Tours:

1) More than 80 days prior to scheduled departure date,
   a. Prior to final payment, $250 per person.
   b. After final payment, $250 per person plus all costs associated with the air transportation.
2) From 79 days to 1 day prior to scheduled departure date,
   a. Without a medical statement, 50% of the tour price plus all costs associated with the air transportation.
   b. With a valid medical statement (see "Medical Statement Requirements"), 30% of the tour price plus all costs associated with the air transportation.
3) Scheduled departure date and after, no refund.
4) No refund will be issued for any unused portions of a tour.

Note: Cancellations are per room. In most cases of a cancellation by one of two persons sharing a room, it will not be possible to confirm a single room and the "Cancellations" policy will apply to both persons. If Image Tours is able to secure a single room, the traveler must pay the applicable single supplement and complete the required forms. Refer to "Are Single Rooms offered?".

Travel Protection Plans: For coverage of cancellation penalties or missed days of the tour due to covered reasons, Image Tours highly recommends purchasing a travel protection plan. Please note that many health insurance plans do not cover customers while traveling outside the U.S.A. Look for plans that include coverage for travel accident/sickness, travel delays and luggage. Ask your travel agency for options or consider the Travel Protection Plan offered by Image Tours at time of deposit (see page 75). After purchase, the Travel Protection Plan is non-refundable.

Medical Statement Requirements: To be eligible for the refund provision under section 2) b of "Cancellations," it is your responsibility to make certain Image Tours receives a valid medical statement, deemed acceptable to Image Tours, within six weeks of the date you were scheduled to leave. Otherwise, your cancellation will be processed in accordance with section 2) a of "Cancellations."
A valid medical statement must meet all the following criteria:

1) A legible medical statement on the letterhead (including the address and phone number) of an attending licensed physician M.D., or a copy of the Attending Physician Statement required by the insurance provider.
2) Signed by the physician.
3) State specific dates the passenger is unable to travel. These dates must include the entire duration of the scheduled travel dates.
4) State a specific medical reason why the passenger is unable to travel, due to the illness or injury of the participant or participant's travel companion. In case of death of the participant, participant's travel companion, or a member of participant's immediate family, namely spouse, child, brother, sister, parent, in-law, grandparent or grandchild, a copy of the death certificate is required.

©2023 Image Tours

Tour Contract

Baggage Allowances:

1) Suitcase - Motor Coach Allowance: Each participant is entitled to one suitcase during the tour. A wheeled suitcase is recommended. The suitcase cannot exceed 62 total linear inches (length + height + width, excluding wheels and handles), cannot exceed 12 inches on the shortest of the three measurements, and cannot exceed 50 lbs. (23 kgs.) weight. This applies throughout the tour (please be considerate of the drivers) and on your return trip as well (plan for shopping by packing lighter before you leave home). The following are a few examples of common luggage sizes currently on the market that fit the luggage allowances:

   28" x 18.25" x 11.25" (57.5" linear)
   28" x 21" x 10.5" (59.5" linear)
   29" x 20" x 10" (59" linear)
   29" x 20.5" x 12" (61.5" linear)
   29" x 21" x 11" (61" linear)
   29.5" x 22.5" x 10" (62" linear)

Baggage Size Allowances

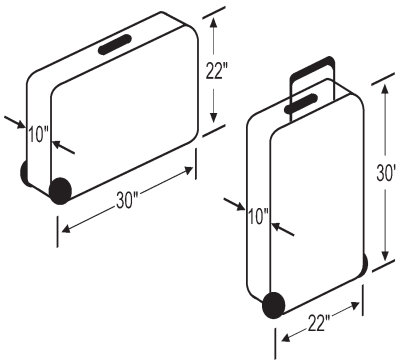

Baggage space on the motor coach is limited. In fairness to all passengers, our tour managers are instructed to direct any participant with a suitcase exceeding the size allowance to purchase a replacement bag on Day 2 of the tour and to leave the oversized bag behind or ask the hotel to ship it back home, entirely at the participant's own expense. If there is room on the motor coach, the tour manager may allow the oversized luggage, in which case the tour participant must pay the foreign currency equivalent of $10.00 per day to the tour manager at the beginning of the tour, for excess storage fees. If luggage weighs more than 50 lbs., the tour participant will be required to redistribute excess weight to a carry-on or discard items as necessary.

2) Suitcase - Airline Allowance: Airline baggage allowances may differ from the Motor Coach Allowance. Airline baggage fee policies are changing frequently and are inconsistent between carriers. Airline baggage fees are not included and, if charged, the passenger is responsible to pay any applicable baggage fees directly to the airline. To minimize (and possibly avoid) baggage fees, Image Tours recommends you follow the same checked baggage allowance for air travel as outlined for the motor coach (#1 of this section), namely one suitcase not to exceed 50 lbs. and 62 linear inches.

3) Carry-on - Motor Coach/ Airline Allowance: Each passenger is entitled to one carry-on. In addition, each participant may carry a coat over their arm, a camera or small purse over their shoulder, and a magazine or book in their hand. **The carry-on may not exceed 15 lbs. and must fit in the space under your seat on the motor coach. This space measures 15" x 12" x 7".** During the tour, you will **not** be able to store your carry-on in the suitcase compartment under the bus. For safety and storage considerations, wheeled carry-on bags are **not** suitable.

Baggage Loss or Damage:

Baggage loss or damage sustained while in the custody of an airline, hotel, bus company, or transfer company is not the responsibility of Image Tours. A statement outlining airline liability for passengers' baggage, as part of the Contract of Carriage, can be found on file for inspection at the offices of the airline or on the airline's website. The airline's liability shall in no event exceed the actual loss incurred by the passenger, subject to proof of the amount of the loss.

What to do in case of damage or loss by an airline: The participant must report the loss or damage immediately (while still at the airport) to the airline in question for two reasons: a) Most airlines require immediate claims or they will not accept them; b) Insurance companies have the right to void any claim that is not reported immediately.

Responsibility of the Airlines:

The airlines are not held responsible for any acts, omissions, or events during the time the passengers are not on board their aircraft or conveyances. The passenger's contract in use by the airlines, when issued, (for view on the airline website), shall constitute the sole contract between the airline and the passenger. Any and/or all transportation companies shall have or incur no responsibility for liability to any traveler aside from their liability as common carriers. Services performed and tickets issued by the air carrier are subject to rules and regulations relating to liabilities established by the Warsaw and Montreal Conventions and the terms and conditions of the airline contract.

Hazardous Materials Notice:

Federal law forbids the carriage of hazardous materials aboard an aircraft in your luggage or on your person. A violation can result in five years imprisonment and penalties

©2023 Image Tours

of $250,000 or more (49 U.S.C. 5124). Hazardous materials include explosives, compressed gases, flammable liquids and solids, oxidizers, poisons, corrosives and radioactive materials. Examples: paints, lighter fluid, fireworks, tear gases, oxygen bottles and radiopharmaceuticals. There are special exceptions for small quantities (up to 70 ounces total) of medicinal and toilet articles carried in your luggage and certain smoking materials carried on your person. For further information, review the prohibited items webpage on the TSA website: www.tsa.gov.

Cancellation by Image Tours: Image Tours reserves the right to cancel a tour at any time and for any reason. If Image Tours is responsible for the cancellation of your tour, its liability shall be limited to a refund in full of only those monies it has received from or on behalf of the participant. Cancellations beyond the control/responsibility of Image Tours (including but not limited to cancellation of a group due to insufficient group participation or for any other reason listed in the "Responsibility" paragraph on this page), will be subject to the Image Tours "Cancellations" policy. If the air ticket is purchased through any source other than Image Tours, it is the purchaser's responsibility to become familiar with the penalties and restrictions. In the event of a cancellation or date change, for any reason, Image Tours shall not be held liable for any penalties incurred from the cancellation or change of the air ticket. Therefore, we recommend tickets not be issued until 75 days or less prior to the departure date.

Responsibility: Image Tours, its employees, shareholders, subsidiaries, affiliates, officers and directors (collectively "Image Tours") does not own or operate any entity which is to provide or does provide goods or services for your trip, including, for example, lodging facilities, transportation companies, local ground handlers, tour operators, food service or entertainment providers, etc. As a result, Image Tours is not liable for any negligent or willful act or failure to act of any such person, or of any other third party not under its control. Without limiting the foregoing, Image Tours accepts no responsibility for any risk or resulting injury, delay, postponement, cancellation, inconvenience, damage, or death which results from criminal activity, accidents, disease, epidemic or the threat thereof, pandemic or the threat thereof, illness, the provision of inappropriate or no medical attention or the lack of access to same, the demands of indoor or outdoor activities, service policies, government regulations, strikes, political or civil unrest, overbooking, structural or other defective conditions in hotels or other lodging facilities, acts of terrorism or the threat thereof, insurrection or revolt, weather, acts of God or any other events or circumstances beyond its control. In addition, Image Tours is not responsible for typographical or substantive errors in descriptions.

Travel Advisories/Warnings and Health Alerts: It is the responsibility of the traveler to become informed about current travel advisories and warnings. Refer to the U. S. State Department's travel website at www.travel.state.gov or call 1-888-407-4747. For health alerts, refer to the Centers for Disease Control website at www.cdc.gov or call 1-800-232-4636.

Traveler's Representation: The traveler represents that neither they nor anyone traveling with them has any physical or other condition or disability that could create a hazard to themself or other members of the tour. Image Tours reserves the right to decline to accept or retain any person as a member of the tour at any time prior to departure, or in the course of the tour, should such participant's health, mental condition, physical infirmity or general deportment impede, in Image Tours' judgment, the operation of the tour or the rights, welfare or enjoyment of other tour participants, and all resulting costs will be the responsibility of the participant.

Entire Agreement: Participant warrants that no promises or inducements have been offered for this agreement other than as set forth herein and that this agreement is executed without reliance upon any other promises or representations. No modification, termination or attempted waiver of this Tour Contract shall be valid unless in writing and signed by the participant and an officer of Image Tours.

Arbitration Agreement: Any controversy or claim arising out of or relating to this Tour Contract, to the brochure or to any information relating in any way to the travel arrangements, or to the tour itself, shall be settled solely and exclusively by binding arbitration in Grand Rapids, Michigan in accordance with the then existent commercial rules of the American Arbitration Association. In any such arbitration, the substantive (but not procedural) law of Michigan shall apply. The arbitrator and not any federal, state, or local court or agency shall have exclusive authority to resolve any dispute relating to the interpretation, applicability, enforceability, conscionability or formation of this contract, including but not limited to any claim that all or any part of this contract is void or voidable.

Payment to Image Tours, or toward an Image Tours product, constitutes your acceptance of the Tour Contract as set out here.

©2023 Image Tours